150

Riduttori Coassiali
Versione flangiata
In Line Reduction Gears
Flange mounted

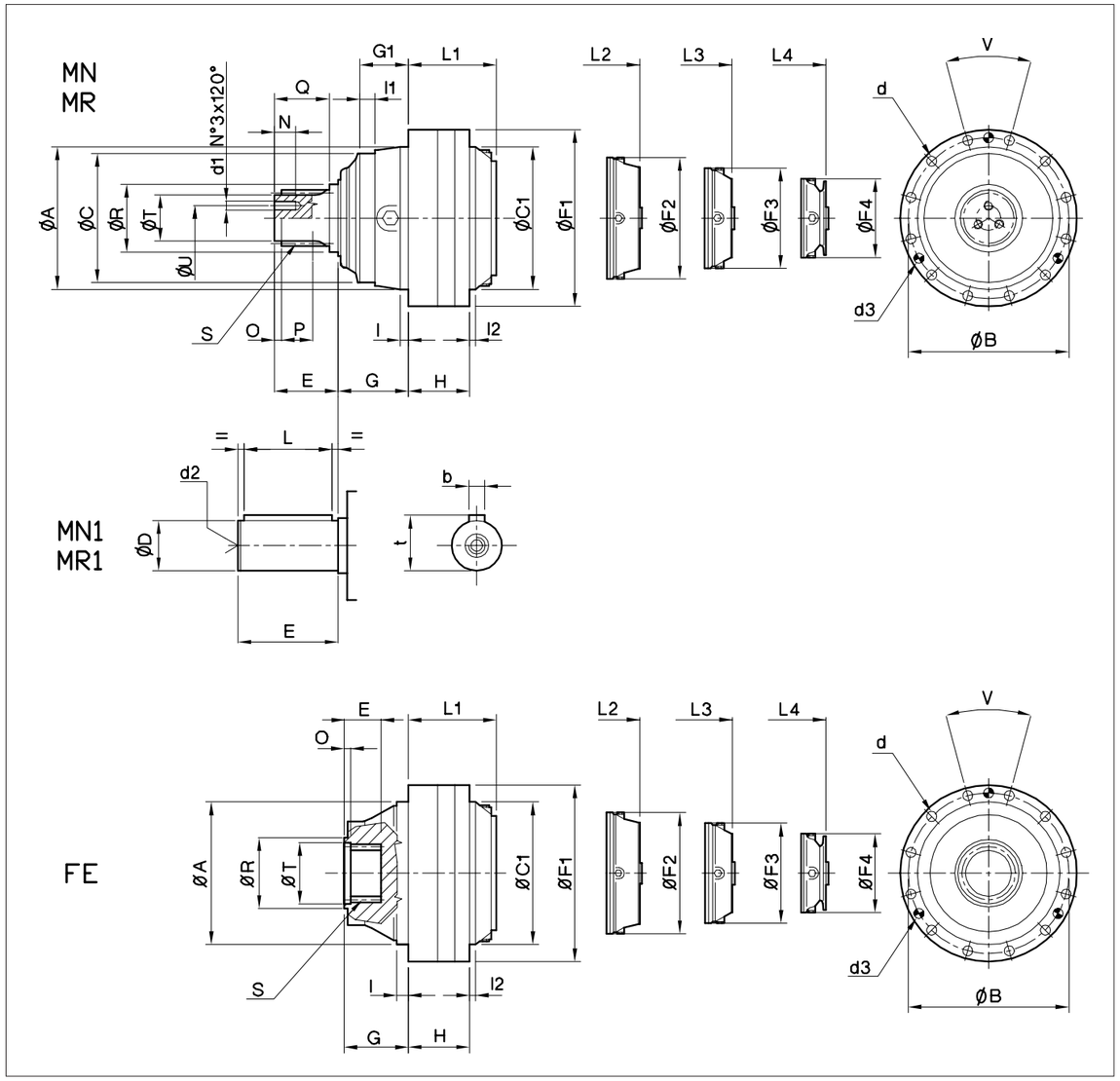

E 150

L_1 = EM 1150 L_2 = ED 2150 L_3 = ET 3150 L_4 = EQ 4150

	ØA	ØB	ØC	ØC1	ØD	E	ØF1	ØF2	ØF3	ØF4	ØFc	Fc1	G	G1	H	I	I1	I2	L1	L2	L3
MN	278f7	314	225f7	278f7		90	340	240	240	183	328	268	143	102	125	18	25	10	186	263	331
MR	278f7	314	240f7	278f7		110	340	240	240	183	328	268	249	206	145	30	75	10	206	283	351
MN1	278f7	314	225f7	278f7	100m6	210	340	240	240	183	328	268	143	102	125	18	25	10	186	263	331
MR1	278f7	314	240f7	278f7	100m6	210	340	240	240	183	328	268	249	206	145	30	75	10	206	283	351
FE	278f7	314		278f7		77	340	240	240	183	328	268	80		105	15		10	166	243	311

150

Riduttori Ortogonali
Versione flangiata
Right Angle Reduction Gears
Flange mounted

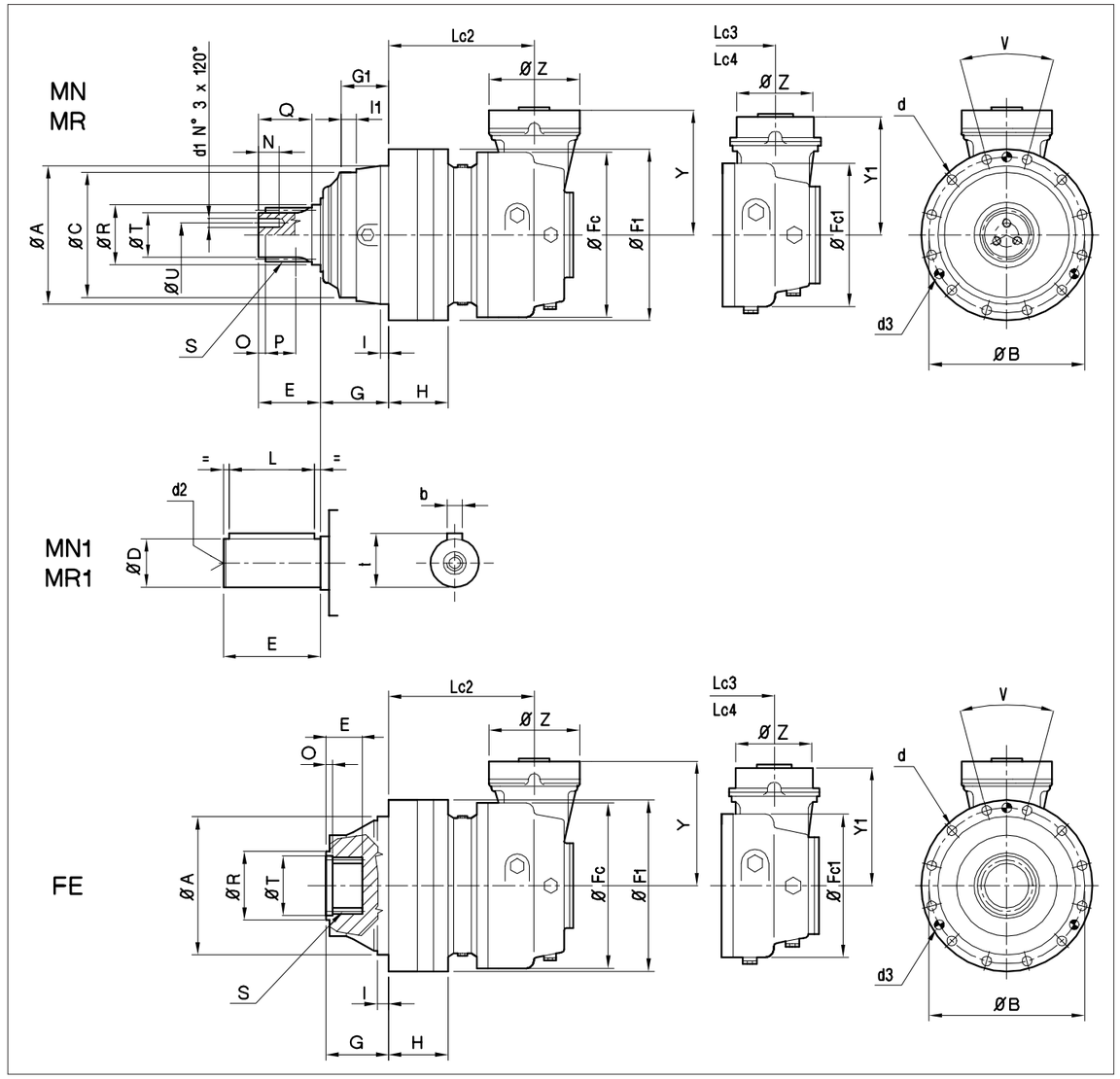

L_{C2} = EC 2150 L_{C3} = EC 3150 L_{C4} = EC 4150

L4	Lc2	Lc3	Lc4	N	O	P	Q	ØR	S	ØT	ØU	V	Y	Y1	ØZ	b	d	d1	d2	d3	L	t
383	260	310	377	25	10	50	80	85f7	B80x74 DIN5482	70h7	45	12x30°	257*	220**	195		16	M10		12		
403	280	330	397	30	12	65	98	105f7	B100x94 DIN5482	85h7	52	12x30°	257*	220**	195		16	M14		12		
383	260	310	377									12x30°	257*	220**	195	28	16		M24 DIN 332	12	200	106
403	280	330	397									12x30°	257*	220**	195	28	16		M24 DIN 332	12	200	106
363	240	290	357		7			98	A80x74 DIN5482	88H7		12x30°	257*	220**	195		16			12		

* Y = 290 / ** Y_1 = 226 per i rapporti (•) nella tabella generale di scelta - * Y = 290 / ** Y_1 = 226 for those ratios (•) in the general selection table

150

Riduttori Coassiali/Ortogonali montaggio pendolare versione FS

In line/Right angle reduction gears shaft mounted FS version

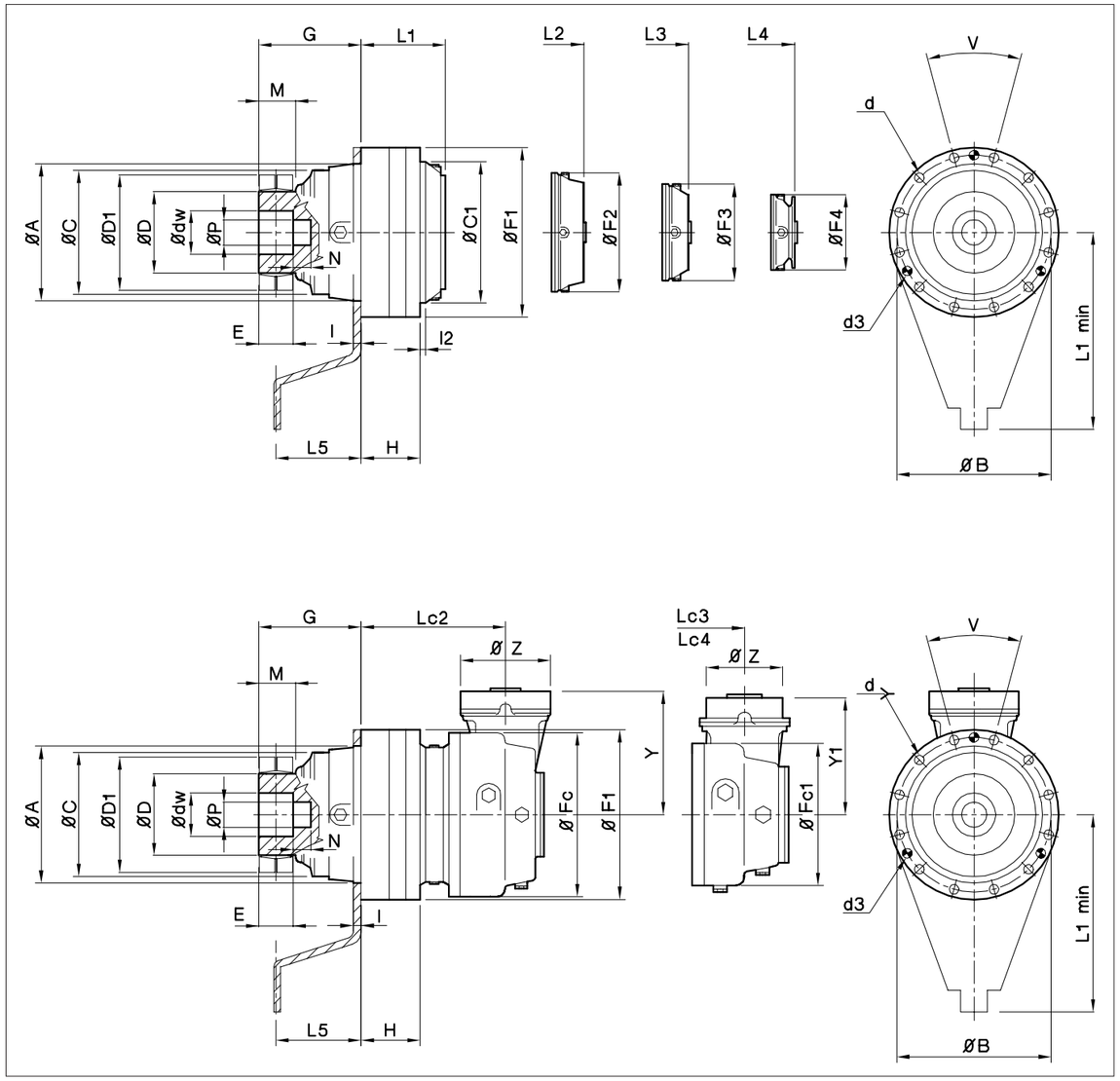

E 150

L1 = EM 1150 FS L2 = ED 2150 FS L3 = ET 3150 FS L4 = EQ 4150 FS

	ØA	ØB	ØC	ØC1	ØD	ØD1	E	ØF1	ØF2	ØF3	ØF4	ØFc	Fc1	G	H	I	L1	L2
FS	278F7	314	278	278f7	165f7	290	85	340	240	240	183	328	268	245	125	17	186	263

Lc2 = EC 2150 FS Lc3 = EC 3150 FS Lc4 = EC 4150 FS

L3	L4	L5	Lc2	Lc3	Lc4	L1min	M	N	ØP	V	Y	Y1	ØZ	d	d3	Ødw
331	383	145	260	310	378	600	107,5	50	80F7	12x30°	257*	220**	195	16	12	120H7

* Y = 290 / ** Y1 = 226 per i rapporti (•) nella tabella generale di scelta - * Y = 290 / ** Y1 = 226 for those ratios (•) in the general selection table

150

Riduttori Coassiali/Ortogonali con fissaggio a piede versione PD-PDA

In line/Right angle reduction gears foot-mounted PD-PDA version

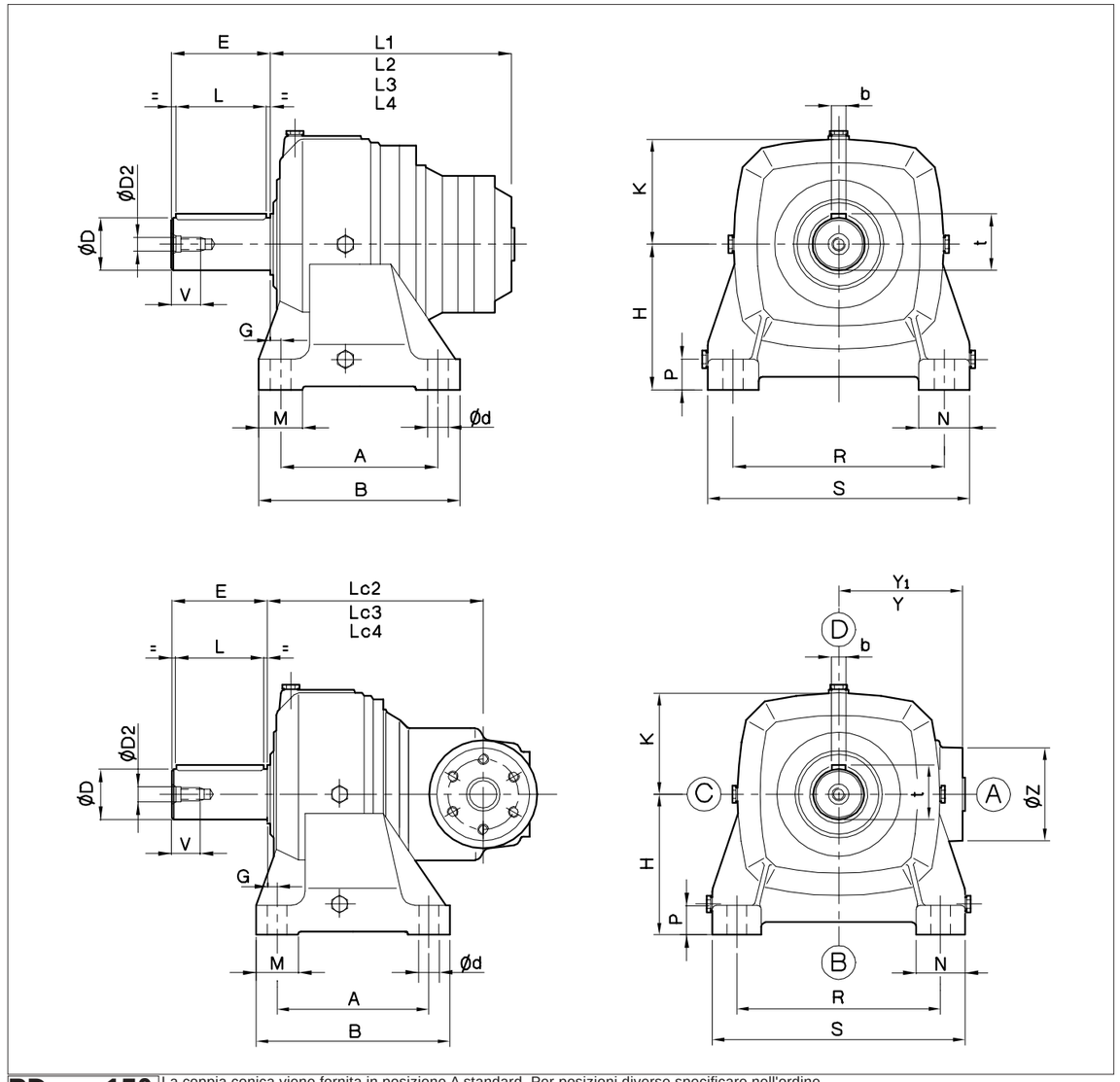

PD ... 150
PDA ... 150

La coppia conica viene fornita in posizione A standard. Per posizioni diverse specificare nell'ordine.
The gear unit is supplied with bevel gear mounted in standard A position. Other mounting position requirements must be specified on the order.

L1 = PD 1150 L2 = PD 2150 L3 = PD 3150 L4 = PD 4150

	A	B	ØD	D2	E	G	H	L	L1	L2	L3	L4	Lc2	Lc3	Lc4
MR1	265	345	100m6	M24 DIN 332	210	33,5	250	200		406	473	536	403	453	520

Lc2 = PDA 2150 Lc3 = PDA 3150 Lc4 = PDA 4150

K	M	N	P	R	S	V	Y	Y1	ØZ	b	Ød	t
180	80	85	55	375	460	50	257*	220**	195	28	33	106

*Solo per il riduttore / Only for reduction gear PDA 2150. * Y = 290 / **Y1 = 226 per i rapporti (•) nella tabella generale di scelta - * Y = 290 / **Y1 = 226 for those ratios (•) in the general selection table

150 Forme costruttive in entrata
Input side configurations

	Motori elettrici Electric motors	Supporti in entrata Input shafts	Freni Brakes
Coassiali / In Line	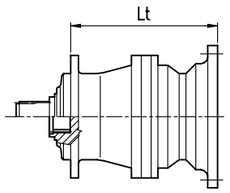	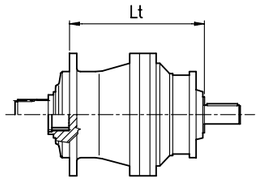 *	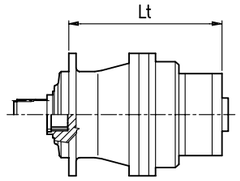
	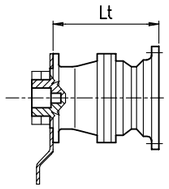	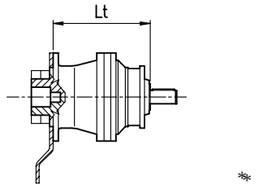 *	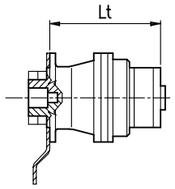
	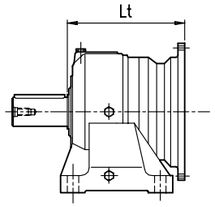	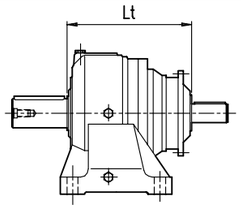 *	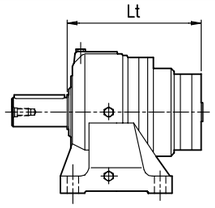
Ortogonali / Right Angle	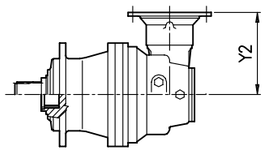	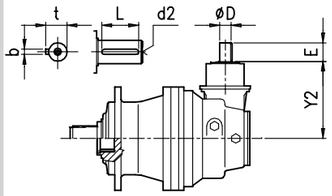	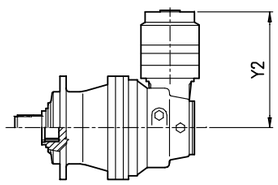
	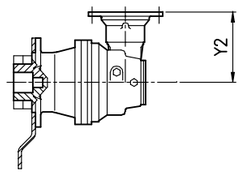	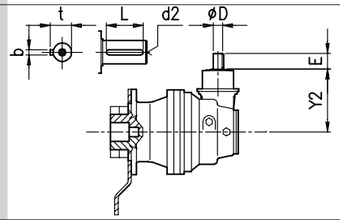	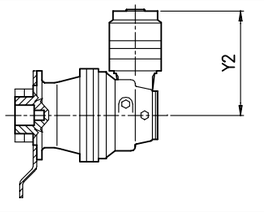
	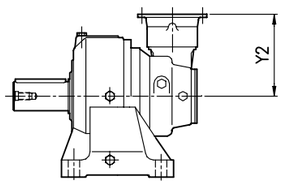	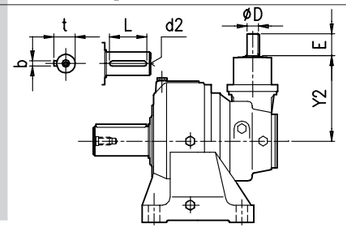	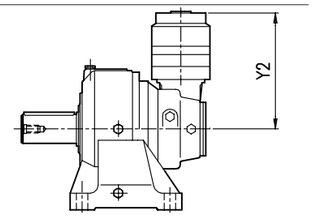

*Le dimensioni relative all'albero in entrata sono a pag. B.8

* See page B.8 for input shaft dimensions

150

		Motori elettrici Electric motors								Supporti in entrata Input shafts						Freni Brakes				
		63	71	80 90	100 112	132	160 180	200	225	S45R	S46	S65	S90	S150		FL 620/12	FL 635/12	FL250 FL350 FL450	FL750	FL760 FL960
		Lt								Lt								Lt		
Coassiali / In Line	MN-MR-MN1-MR1-FE																			
	EM 1150 MN									326	367	366						296	310	324
	ED 2150 MN	283	285	290	291	358	389	399	430	326	367							356	370	397
	ET 3150 MN	351	353	358	359	426	457	467	498	393	434							424	437	
	EQ 4150 MN	403	405	410	411	478										446	428			
	EM 1150 MR									346	387	386						316	330	344
	ED 2150 MR	303	305	310	311	378	409	419	450	346	387							376	390	417
	ET 3150 MR	371	373	378	379	446	447	487	518	413	454							444	457	
	EQ 4150 MR	423	425	430	431	498										466	448			
	EM1150 FE									306	347	346						276	290	304
	ED 2150 FE	263	265	270	271	338	369	379	410	306	347							326	350	377
	ET 3150 FE	331	333	338	339	406	437	447	478	373	414							404	417	
	EQ 4150 FE	383	385	390	391	458										426	408			
	FS																			
	EM 1150 FS									326	367	366						296	310	324
	ED 2150 FS	283	285	290	291	358	389	399	430	326	367							356	370	397
	ET 3150 FS	351	353	358	359	426	457	467	498	393	434							424	437	
	EQ 4150 FS	403	405	410	411	478										446	428			
	PD																			
	PD 1150									468	510	509						439	453	467
	PD 2150	426	428	433	434	501	532	542	573	468	510							500	513	540
	PD 3150	494	496	501	502	569	600	610	641	535	577							567	580	
	PD 4150	546	548	553	554	621										590	571			
		63	71	80 90	100 112	132	160 180	200	225	Y2	ØD	E	L	t	b	d2		FL250 FL350 FL450	FL750	FL760 FL960
		Y2																Y2		
Ortogonali / Right Angle	MN-MR-MN1-MR1-FE																			
	EC 2150 MN*	310	312	317	318	385	416			317	48k6	82	70	51,5	14	M10		441	455	
	EC 2150 MN	277	279	284	285	352	383			317	48K6	82	70	51,5	14	M10		408	422	
	EC 3150 MN*	246	248	253	254	321	352			280	48K6	82	70	51,5	14	M10		377		
	EC 3150 MN	240	242	247	248	315	346			280	48K6	82	70	51,5	14	M10		280		
	EC 4150 MN*	246	248	253	254	321	352			280	48K6	82	70	51,5	14	M10		377		
	EC 4150 MN	240	242	247	248	315	346			280	48K6	82	70	51,5	14	M10		280		
	EC 2150 MR*	310	312	317	318	385	416			317	48k6	82	70	51,5	14	M10		441	455	
	EC 2150 MR	277	279	284	285	352	383			317	48K6	82	70	51,5	14	M10		408	422	
	EC 3150 MR*	246	248	253	254	321	352			280	48K6	82	70	51,5	14	M10		377		
	EC 3150 MR	240	242	247	248	315	346			280	48K6	82	70	51,5	14	M10		280		
	EC 4150 MR*	246	248	253	254	321	352			280	48K6	82	70	51,5	14	M10		377		
	EC 4150 MR	240	242	247	248	315	346			280	48K6	82	70	51,5	14	M10		280		
	EC 2150 FE*	310	312	317	318	385	416			317	48k6	82	70	51,5	14	M10		441	455	
	EC 2150 FE	277	279	284	285	352	383			317	48K6	82	70	51,5	14	M10		408	422	
	EC 3150 FE*	246	248	253	254	321	352			280	48K6	82	70	51,5	14	M10		377		
	EC 3150 FE	240	242	247	248	315	346			280	48K6	82	70	51,5	14	M10		280		
	EC 4150 FE*	246	248	253	254	321	352			280	48K6	82	70	51,5	14	M10		377		
	EC 4150 FE	240	242	247	248	315	346			280	48K6	82	70	51,5	14	M10		280		
	FS																			
	EC 2150 FS*	310	312	317	318	385	416			317	48k6	82	70	51,5	14	M10		441	455	
	EC 2150 FS	277	279	284	285	352	383			317	48K6	82	70	51,5	14	M10		408	422	
	EC 3150 FS*	246	248	253	254	321	352			280	48K6	82	70	51,5	14	M10		377		
	EC 3150 FS	240	242	247	248	315	346			280	48K6	82	70	51,5	14	M10		280		
	EC 4150 FS*	246	248	253	254	321	352			280	48K6	82	70	51,5	14	M10		377		
	EC 4150 FS	240	242	247	248	315	346			280	48K6	82	70	51,5	14	M10		280		
	PDA																			
	PDA 2150*	310	312	317	318	385	416			317	48k6	82	70	51,5	14	M10		441	455	
	PDA 2150	277	279	284	285	352	383			317	48K6	82	70	51,5	14	M10		408	422	
	PDA 3150*	246	248	253	254	321	352			280	48K6	82	70	51,5	14	M10		377		
	PDA 3150	240	242	247	248	315	346			280	48K6	82	70	51,5	14	M10		280		
	PDA 4150*	246	248	253	254	321	352			280	48K6	82	70	51,5	14	M10		377		
	PDA 4150	240	242	247	248	315	346			280	48K6	82	70	51,5	14	M10		280		

* = Quota valida per i rapporti contrassegnati (•) nella tabella generale di scelta - Valid for those ratios marked by (•) in the general selection table